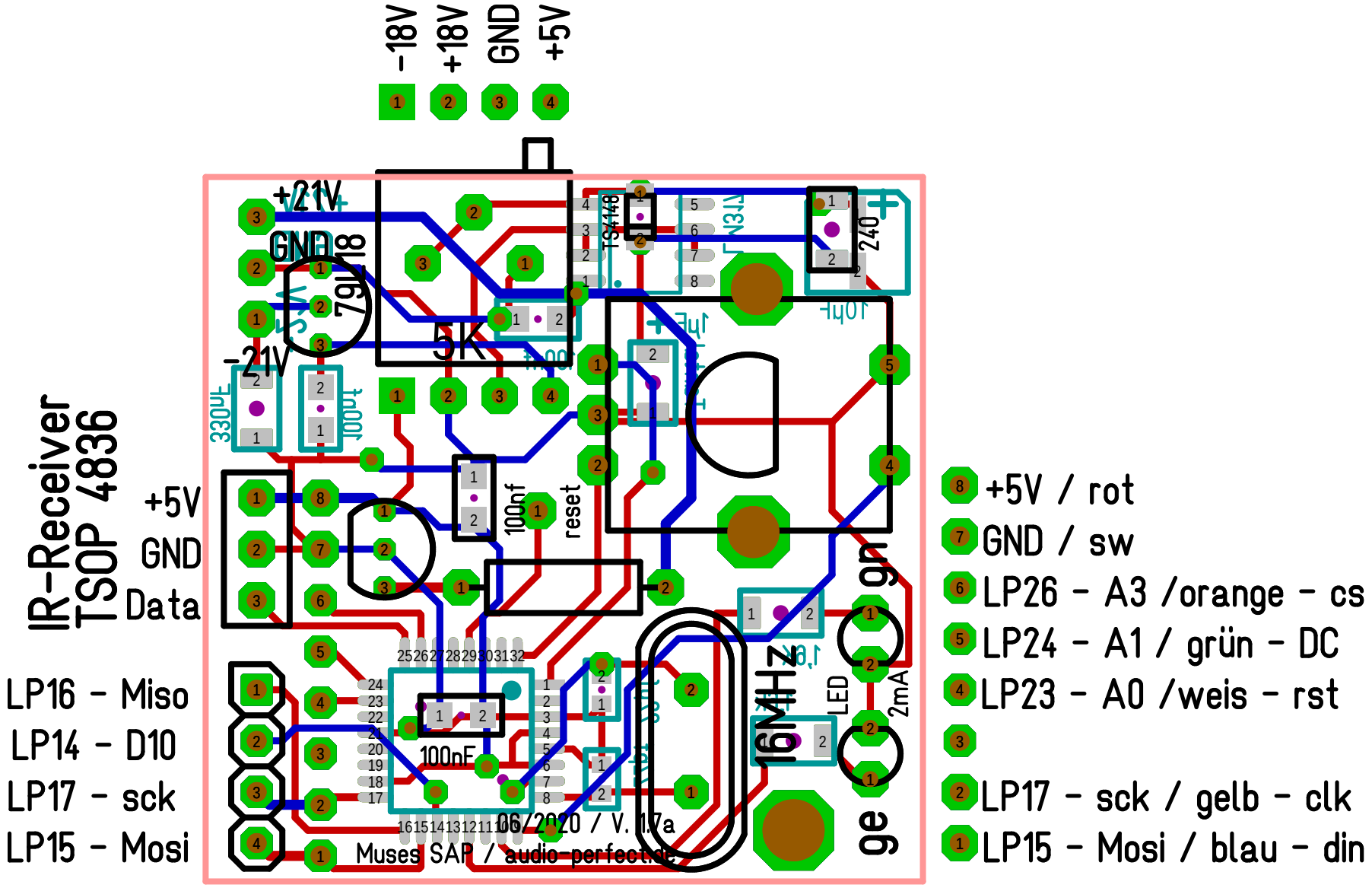

-18V
+18V
GND
+5V
+21V
GND
-21V
79L18
5K
TS4148
240
IR-Receiver
TSOP 4836
+5V
GND
Data
LP16 - Miso
LP14 - D10
LP17 - sck
LP15 - Mosi
100nf
reset
100nF
16MHz
LED
2mA
06/2020 / V. 1.7a
Muses SAP / audio-perfection
+5V / rot
GND / sw
LP26 - A3 /orange - cs
LP24 - A1 / grün - DC
LP23 - A0 /weis - rst
LP17 - sck / gelb - clk
LP15 - Mosi / blau - din